Important suggestions to examiners:

1) The answers should be examined by key words and not as word-to-word as given in the model answer scheme.
2) The model answer and the answer written by candidate may vary but the examiner may try to assess the understanding level of the candidate.
3) The language errors such as grammatical, spelling errors should not be given more importance. (Not applicable for subject English and communication skills)
4) While assessing figures, examiner may give credit for principle components indicated in a figure. The figures drawn by candidate and model answer may vary. The examiner may give credit for any equivalent figure drawn.
5) Credits may be given step wise for numerical problems. In some cases, the assumed constant values may vary and there may be some difference in the candidate's answers and model answer.
6) In case some questions credit may be given by judgment on part of examiner of relevant answer based on candidate understands.
7) For programming language papers, credit may be given to any other program based on equivalent concept.

Q.1	Attempt any FIVE of the following : 10 Marks
a)	**Define Reluctance. What is its units?**
Ans	**Reluctance (s) :-** **(1 Marks)** Reluctance is the property of the substance which opposes the creation of flux in it. **OR** It is defined as the opposition to the creation of flux in the material. **Unit of Reluctance (s) :-** **(1 Marks)** Its unit is : AT/Wb
b)	**Write any two advantages of AC over DC.**
Ans	**Advantages of AC over DC :** **(Any Two advantages expected : 1 Mark each)** 1) We can easily step up or step down the voltage easily with the help of transformer 3) Generation is easy. 4) Design of AC machine is easy.

c)	**Draw the waveform representation of a three phase AC supply with neat labels.**
Ans	**waveform representation of a three phase AC supply with neat labels :** **(2 Marks)** 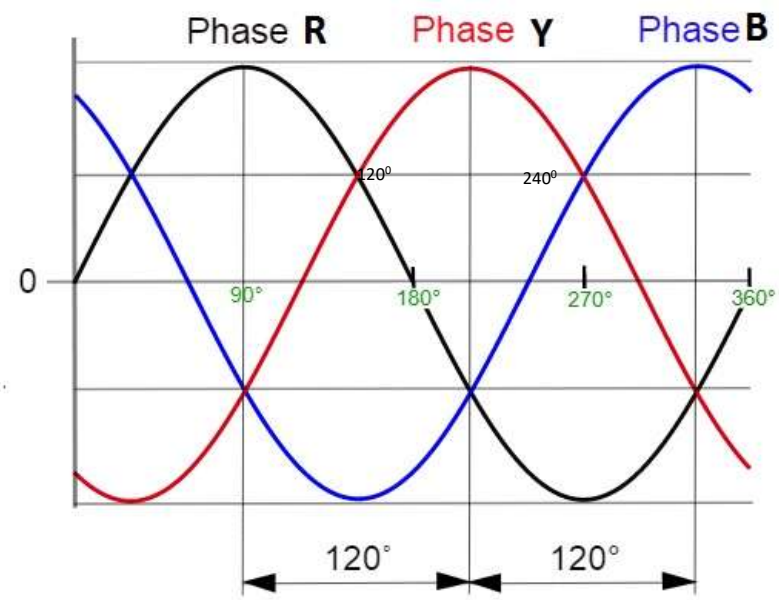 **OR equivalent Figure** 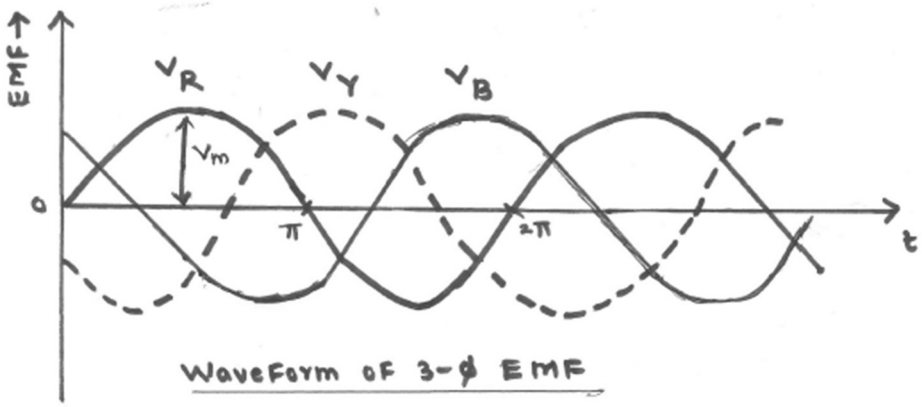
d)	**Define the transformation ratio of a transformer.**
Ans	**Transformation Ratio (k):- ----------** **(2 Marks)** It is the ratio of secondary number of turns to primary number of turns. OR It is the ratio of secondary voltage to primary voltage. **OR** It is the ratio of primary current to secondary current. **OR** $$Transformation\ \ ratio\ (k) = \frac{N_2}{N_1}\ or = \frac{E_2}{E_1}\ or = \frac{V_2}{V_1}\ or = \frac{I_1}{I_2}$$

e)	**Draw neat constructional sketch of shell type transformer.**
Ans	**Constructional sketch of shell type transformer :** **(2 Marks)** 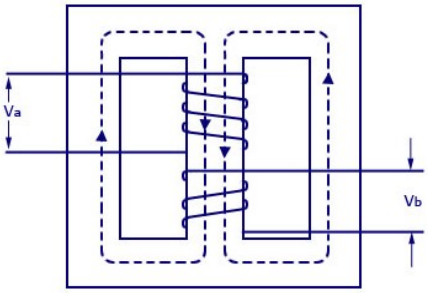 **OR Equivalent**
f)	**State the types of single phase induction motors.**
Ans	**Types of single phase induction motors:** **(Any Two Types expected: 1 Mark each)** 1. Split phase induction motor. 2. Capacitor start **inductor** motor. 3. Capacitor start **capacitor** run **induction motor.** 4. Permanent split capacitor motor. 5. Shaded pole induction motor.
g)	**List the types of Fuses.**
Ans	**Types of Fuses:** **(Any Two Types expected: 1 Mark each)** 1. Rewirable Fuses 2. HRC Fuse 3. Cartridge type Fuses 4. D-type Cartridge Fuse 5. Link Type Fuse 6. Blade and Bolted type Fuses 7. Striker type Fuse 8. Switch type Fuse 9. HV (High Voltage) Fuses 10. Cartridge Type HRC Fuse 11. Liquid Type HRC Fuse 12. Expulsion Type HV Fuse

Q.2	Attempt any THREE of the following : 12 Marks
a)	Explain self induced emf and mutually induced emf with neat sketch.
Ans:	i) Self induced emf : (Figure : 1 Mark & Explanation : 1 Mark)

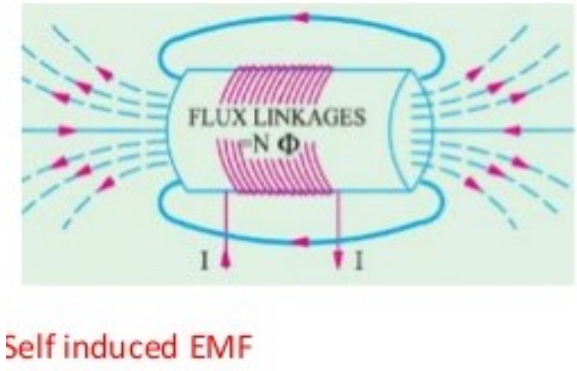

OR equivalent figure

Self-induced emf is the e.m.f induced in the coil due to the change of flux produced by linking it with its own turns. This phenomenon of self-induced emf

$$e \, \alpha \frac{dI}{dt} or \;\; e = L\frac{dI}{dt}$$

ii) Mutually induced emf : (Figure : 1 Mark & Explanation : 1 Mark)

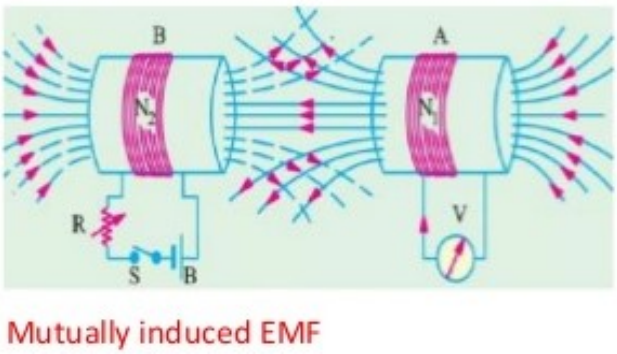

OR equivalent figure

The emf induced in a coil due to the change of flux produced by another neighboring coil linking to it, is called **Mutually Induced emf.**

$$e_m \, \alpha \frac{dI_1}{dt} or \;\; e = M\frac{dI_1}{dt}$$

b)	**Explain the generation of single phase AC supply by an elementary alternator with neat sketch.**
Ans:	**Diagram:** **(2 Marks)** 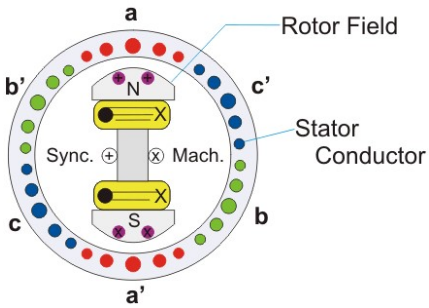 **Explanation :** **(2 Marks)** Principle of alternator depends upon Faraday's law of electromagnetic induction. When the field winding gets excited field current flows through the field winding which produces magnetic flux in the air gap. As the prime mover rotates, the field winding also rotates and hence the magnetic flux also rotates. This rotating magnetic field is cut by the stationary armature conductors (Stator). So according to Faraday's law of electromagnetic induction , an EMF is induced in the armature conductors.
c)	**Draw neat constructional sketch of auto transformer. State its advantages and applications.**
Ans:	**Constructional sketch of auto transformer:** **(2 Mark)** 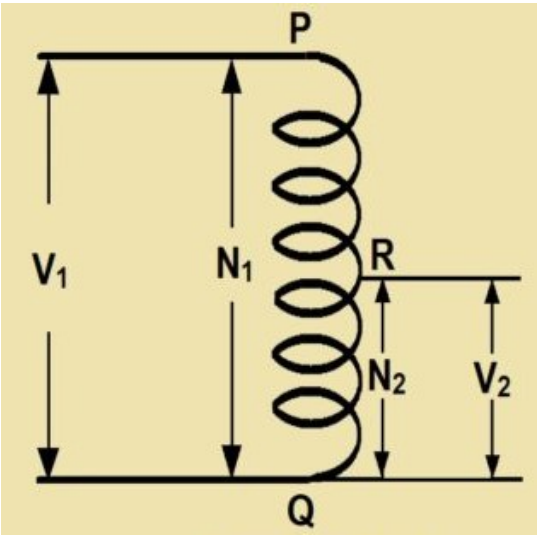 **OR Equivalent Figure**

	Advantages of autotransformer:- **(Any Two accepted from following or equivalent: 1/2 Mark each :Total 1 Mark)** 1. Saving of copper takes place/Copper required is less. 2. Autotransformer is smaller in size. 3. Cost is less as compare to conventional transformer. 4. Copper losses are less. 5. Superior voltages regulation than two winding transformer. 6. High efficient than two winding transformer. 7. Resistance and leakage reactance is less compared to two winding transformer. **Application of autotransformer-** **(Any Two accepted from following or equivalent : 1/2 Mark each: Total 1 Mark)** 1. It is used as a starter for induction motor. 2. It is used in electrical testing laboratory. 3. It is used to control the voltage level. 4. It is used in locomotives for control equipment.
d)	**State four advantages of poly-phase circuit over single phase circuit.**
Ans:	**Advantages of 3-phase supply over 1-phase supply: (Any four points are accepted from following or equivalent 1 Mark each point : Total 4 Marks)** 1. **Constant power output:** The power delivered by a three phase supply is constant and that of single phase supply is oscillating. 2. **Higher power:** For the same copper size output of 3 phase supply is always higher than single phase supply. 3. **Smaller conductor cross section:** For given power, cross section area of copper is smaller as compared to single phase. 4. **Magnetic field:** Three phase supply has rotating magnetic field and single phase supply has pulsating magnetic field. 5. **Power Handling Capacity:** Power handling capacity of three phase supply is three times more than single phase supply

Q.3	Attempt any THREE of the following : 12 Marks
a)	**Compare magnetic circuit and electric circuit on any four points.**

Ans: **Compare Magnetic and Electric circuit:**

(Any four points are accepted from following or equivalent 1 Mark each point, total 4 Marks)

S.No	Magnetic circuit	Electric circuit
1	The magnetic circuit in which magnetic flux flow	Path traced by the current is known as electric current.
2	MMF is the driving force in the magnetic circuit. The unit is ampere turns.	EMF is the driving force in the electric circuit. The unit is Volts.
3	There is flux φ in the magnetic circuit which is measured in the weber.	There is a current I in the electric circuit which is measured in amperes.
4	The number of magnetic lines of force decides the flux.	The flow of electrons decides the current in conductor.
5	Reluctance (S) is opposed by magnetic path to the flux. The Unit is ampere turn/weber.	Resistance (R) oppose the flow of the current. The unit is Ohm
6	$S = l/(\mu_0\mu_r a)$.	$R = \rho . l/a$.
7	The Flux = MMF/ Reluctance	The current I = EMF/ Resistance
8	The flux density	The current density
9	Kirchhoff mmf law and flux law is applicable to the magnetic flux.	Kirchhoff current law and voltage law is applicable to the electric circuit.

b) A 2000/200V, single phase, 50Hz transformer has the maximum flux of 30 mwb. Find out the no. of turns on primary and secondary windings if the cross sectional area of the core is 1.1 cm².

Ans: $V_1 = 2000\,V \quad V_2 = 200\,V \quad N_1 = ? \quad N_2 = ? \quad \phi_m = 30mwb = 30\times10^{-3}\,wb$

$A = 1\,cm^2 = 1\times10^{-4}\,m^2$

i) Number of primary winding turns N_1:

$V_1 = 4.44\,\phi_m\, f\, N_1$ ---------- **(1 Mark)**

$$N_1 = \frac{V_1}{4.44\times f\times\phi_m}$$

$$N_1 = \frac{2200}{4.44 \times 50 \times 30 \times 10^{-3}}$$

$$N_1 = 300.30\ turns \cong 300\ turns$$ ---------- **(1 Mark)**

ii) Number of Secondary winding turns N_2:

$$V_2 = 4.44\,\phi_m\, f\, N_2$$ ---------- **(1 Mark)**

$$N_2 = \frac{V_2}{4.44 \times f \times \phi_m}$$

$$N_2 = \frac{200}{4.44 \times 50 \times 30 \times 10^{-3}}$$

$$N_2 = 30.30\ turns \cong 30\ turns$$ ---------- **(1 Mark)**

c) Draw schematic representation of capacitor start capacitor run induction motor. Also state its applications.

Ans: **Schematic representation of capacitor start capacitor run induction motor:**

(Diagram-2 Marks & Application-2 Marks)

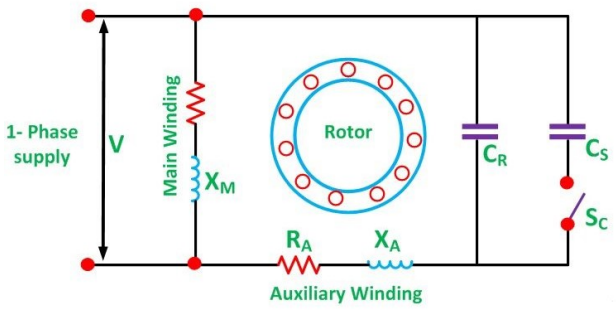

OR

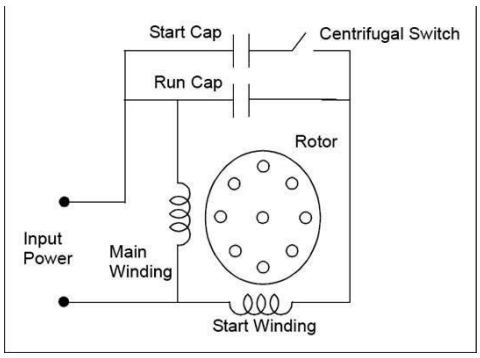

or Equivalent fig

Applications of capacitor start capacitor run induction motor:

(Any two applications are accepted from following or equivalent 1 Mark each point)

1) Fans, Blowers,
2) Grinder
3)Washing machine,
4) Refrigerator, Air conditioner
5) Drilling machine
6) Domestic water pumps, Compressors.

d)	**Explain pipe earthing with a neat labelled diagram.**
Ans:	**Diagram for Pipe Type earthing :** **(2 Marks)**

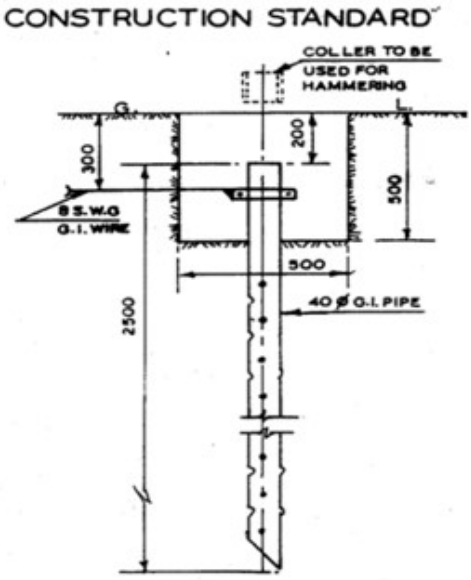

or equivalent figure

Explanation: (Following or equivalent explanation is to be accepted) (2 Marks)

- Excavation on earth for a normal earth Pit of size 2.7 M X 0.6 M X 3.0 M.Or 4.5 M
- For Pipe type earthing normal practice is to use; GI pipe [C-class] of 75 mm diameter of length Having 6 numbers of holes for the connection of earth wires
- Normal Practice is to use GI earthing pipe of length as per requirement.
- Cover Top of GI pipe with a T joint to avoid jamming of pipe with dust & mud.
- These types of earth pit are generally filled with alternate layer of charcoal & salt up to 4 feet from the bottom of the pit.
- The electrical installation which to be earthed, is connected to the top of the earth pipe by means of copper or aluminium earth continuity conductor of sufficient cross-section.
- Normal practice is to use GI earthing wire of 10/8/6 SWG as per requirement

Q.4	**Attempt any THREE of the following :** **12 Marks**
a)	**Explain B-H curve and draw with all parameters.**
Ans:	**B-H curve:** **(Diagram ; 2 Marks & Explanation: 2 Marks)**

The B-H curve is the graphical representation of relation between flux density (B) and applied field strength (H), with H plotted on the x-axis and B plotted on the y-axis.

Typical B-H curve is as shown in figure below:

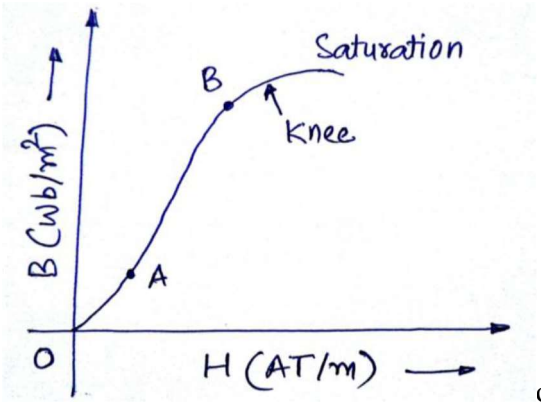

or

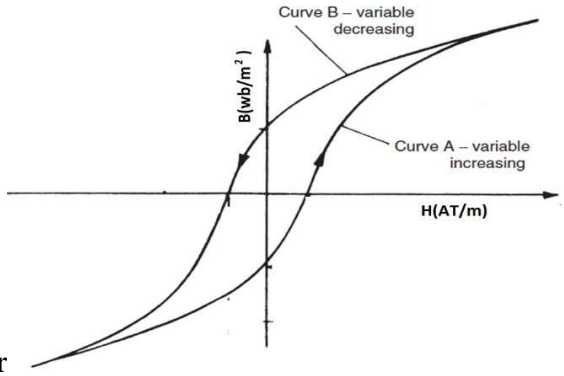

OR Equivalent Figure

The B-H curve can be described by dividing it into 3 regions.

- **Region OA:** For zero current, H = 0 and B is also zero. The flux density B then increases gradually as the value of H is increased. However B changes slowly in this region.
- **Region AB:** In this region, for small change in H, there is large change in B. The B-H curve is almost linear in this region.
- **Region beyond B:** After point B, the change in B is small even for a large change in H. Finally, the B-H curve will tend to be parallel to X axis. This region is called as saturation region.

b) Compare two winding transformer and auto transformer. (Any four points)

Ans: **(Any four points are accepted from following or equivalent 1 Mark each point, total 4 Marks)**

S.No.	Points	Two winding transformer	Autotransformer
1.	**Symbol**	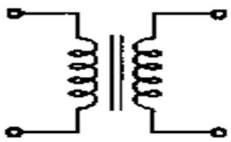	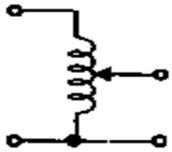
2.	**Number of windings**	It has two windings	It has one winding
3.	**Copper saving**	Copper saving is less	Copper saving takes more as compared to two winding

4.	**Size**	Size is large	Size is small
5	**cost**	Cost is high	Cost is low
6	**Losses in winding**	More losses takes place	Less losses takes place
7.	**Efficiency**	Efficiency is high	Efficiency is low
8.	**Electrical isolation**	Electrical isolation is present in between primary and secondary winding	There is no electrical isolation
9.	**Movable contact**	Movable contact is not present	Movable contact is present
11.	**Application**	Mains transformer, power supply, welding, isolation transformer	Variac, starting of ac motors, dimmerstat.

c) Explain principle of operation of universal motor with neat diagram.

Ans: **Figure of Universal motor:** **(Figure : 2 Marks & Explanation : 2 Marks)**

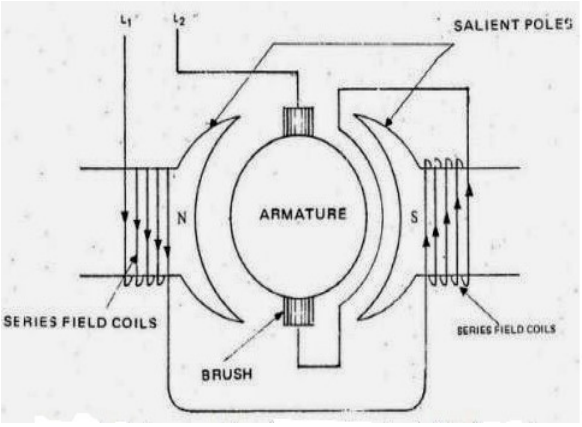

OR

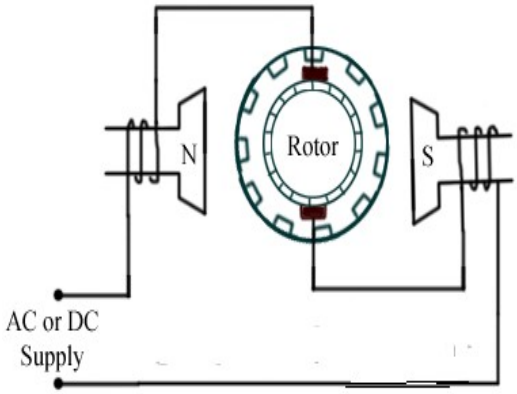

OR Equivalent figure

Working of universal motor: **(Following or equivalent working is to be accepted)**

- A universal motor works on either DC or single phase AC supply. When the universal motor is fed with a DC supply, it works as a DC series motor. When current flows in the field winding, it produces an electromagnetic field. The same current also flows from the armature conductors. When a current carrying conductor is placed in an electromagnetic field, it experiences a mechanical force. Due to this mechanical force, or torque, the rotor starts to rotate. The direction of this force is given by Fleming's left hand rule.

  When fed with AC supply, it still produces unidirectional torque. Because, armature

	winding and field winding are connected in series, they are in same phase. Hence, as polarity of AC changes periodically, the direction of current in armature and field winding reverses at the same time. Thus, direction of magnetic field and the direction of armature current reverses in such a way that the direction of force experienced by armature conductors remains same. Thus, regardless of AC or DC supply, universal motor works on the same principle that DC series motor works.
d)	**Write any two applications of following motors - (i) Universal motor (ii) Stepper motor**
Ans:	**(Any two applications are accepted from following or equivalent 1 Mark each point)** **i) Application of Universal Motor :** 1) Mixer 2) Food processor 3) Heavy duty machine tools 4) Grinder 5) Vacuum cleaners 6) Refrigerators 7) Driving sewing machines 8) Electric Shavers 9) Hair dryers 10) Small Fans 11) Cloth washing machine 12) portable tools like blowers, drilling machine, polishers etc **ii) Applications of stepper motor-** **(Any two applications are accepted from following or equivalent 1 Mark each point)** 1.Suitable for use with computer controlled system 2. Widely used in numerical control of machine tools. 3. Tape drives 4. Floppy disc drives 5. Computer printers 6. X-Y plotters

7. Robotics
8. Textile industries
9. Integrated circuit fabrication
10. Electric watches
11. In space craft's launched for scientific explorations of planets.
12 Automotive
13. Food processing
14. Packaging

e) State the function of the fuse and material used for fuse.

Ans: **Functions of fuse:** **(2 Marks)**

1. To break the circuit under fault condition.
2. To provide overcurrent protection to the circuit.
3. To provide short circuit protection to the circuit.
4. To provide safety to the users.

Name the material used for fuse wire: **(2 Marks)**

S.No	Material used for fuse wire
1	Tin
2	Lead
3	Zinc
4	Silver
5	Copper
6	Aluminum

Q.5 Attempt any TWO of the following : 12 Marks

(a) An alternating current given by equation i = 142.14 sin 628 t. find - (i) Maximum value (ii) Time period (iii) RMS value (iv) Average value (v) Form factor (vi) Peak factor

Ans: $i = 142.14 \quad \sin 628\,t$

Comparing with standard equation : $i = I_M \ \sin \omega t$

(i) Maximum value : $I_M = 142.14\ Amp$ ---------- **(1/2 Mark)**

Frequency $= \frac{\omega}{2\pi}$

$= \frac{628}{2\pi}$

$F = 99.94 \cong 100\ H_Z$ ---------- **(1/2 Mark)**

(ii) Time Period (T) :

$T = \frac{1}{F} = \frac{1}{100}$ ---------- **(1/2 Mark)**

$T = 0.01$ sec - ---------- **(1/2 Mark)**

(iii) RMS value I_{rms} = $0.707 \times I_m$ ---------- **(1/2 Mark)**

$= 0.707 \times 142.14$

$= 100.49$ Amp ---------- **(1/2 Mark)**

vi) Average Vale I_{avg} $= 0.637 \times I_m$- ---------- **(1/2 Mark)**

$= 0.637 \times 142.14$

$= 90.54$ Amp ---------- **(1/2 Mark)**

v) Form Factor $= \frac{RMS\ Value}{Average\ Value}$ - ---------- **(1/2 Mark)**

$= \frac{100.49}{90.54}$

$= 1.11$ ---------- **(1/2 Mark)**

vi) Peak Factor $= \frac{Maximum\ Value}{RMS\ Value}$ - ---------- **(1/2 Mark)**

$= \frac{142.14}{100.49}$

$= 1.41$ ---------- **(1/2 Mark)**

b)	**Three impedance, each of 10 Ω resistance and 5 Ω inductive reactance in series, are connected in star across a 3 phase, 400 V, 50 Hz AC supply. Determine (i) Phase current (ii) Line current (iii) Phase voltage (iv) Line voltage (v) Power factor (vi) Total line power**
Ans:	Given Data: $Z_{ph} = 10 + j5\,\Omega$ $V_L = 400\,V$ $R_{ph} = 10\,5\,\Omega$ $X_{LPh} = 5\Omega$ $F = 50Hz$ **(i) Phase voltage (V_{ph}):** $V_{ph} = \frac{V_L}{\sqrt{3}}$ ---------- **(1/2 Mark)** $V_{ph} = \frac{400}{\sqrt{3}}$ $V_{ph} = 230.94\ volts$ ---------- **(1/2 Mark)** **(ii) Phase Current (I_{ph}) :** $I_{ph} = \frac{V_{ph}}{Z_{ph}}$ ---------- **(1/2 Mark)** $I_{ph} = \frac{230.94}{10 + j5}$ $I_{ph} = \frac{230.94}{11.18 \angle 26.56}$ $I_{ph} = 20.65 \angle -26.56\ Amps$ ---------- **(1/2 Mark)** **(iii) Line Current (I_L) :** In Star connection $I_L = I_{ph}$ $I_L = 20.65$ Amps ---------- **(1 Mark)** **iv) Line Voltage (V_L) :** 400 Volt ---------- **(1 Mark)** **v) Power Factor (P.F) :** $Cos\phi = \frac{R}{Z}$ ---------- **(1/2 Mark)** $Cos\phi = \frac{10}{11.18}$ $Cos\phi = 0.8944\ lag$ OR $P.F = Cos\phi 26.56 = 0.8944\ lag$ --- **(1/2 Mark)**

	vi) Total Line Power (P_T) : $P_{total} = \sqrt{3}\ V_L\ I_L\ Cos\phi$ ---------- **(1/2 Mark)** $P_{total} = \sqrt{3} \times 400 \times 20.65 \times 0.89$ $P_{total} = 12732.99\ watt$ ---------- **(1/2 Mark)**
c)	**Draw schematic representation of - (i) DC shunt motor (ii) DC series motor (iii) DC compound motor**
Ans:	**i) Schematic representation of DC shunt motor :** **(2 Marks)** 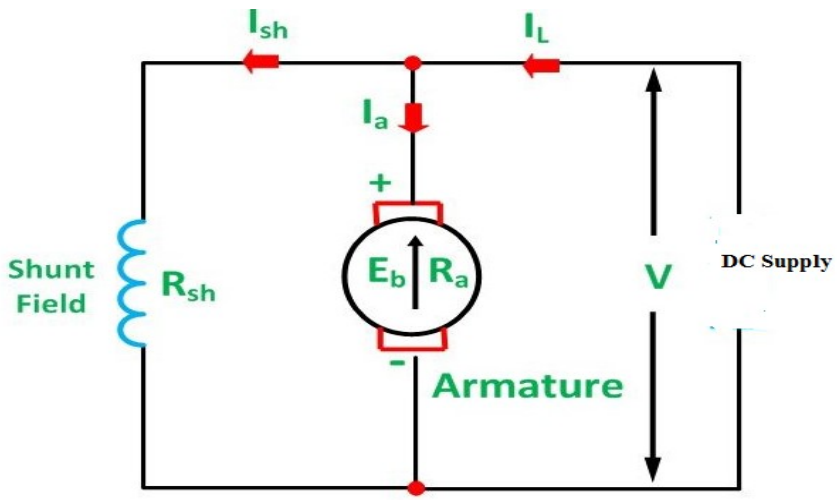 **OR Equivalent Figure** **ii) Schematic representation of DC series motor :** **(2 Marks)** 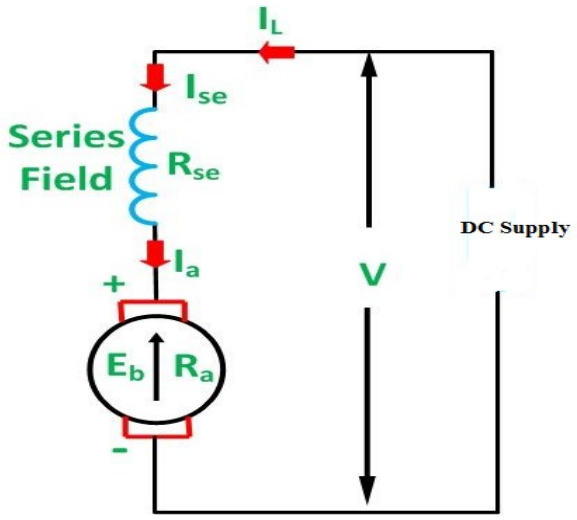 **OR Equivalent Figure**

iii) Schematic representation of DC compound motor : **(2 Marks)**

1) Long shunt dc compound motor-

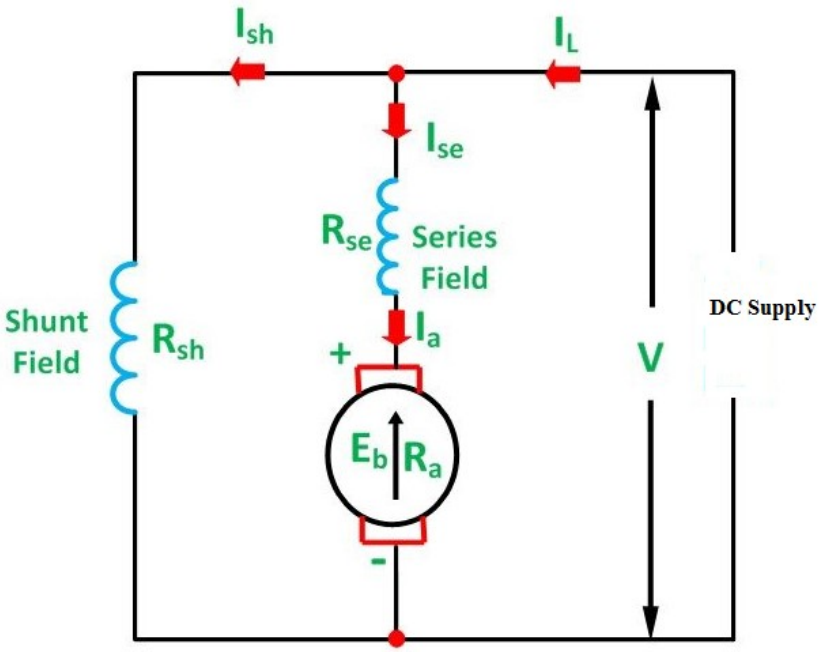

OR Equivalent Figure

2) Short shunt dc compound motor-

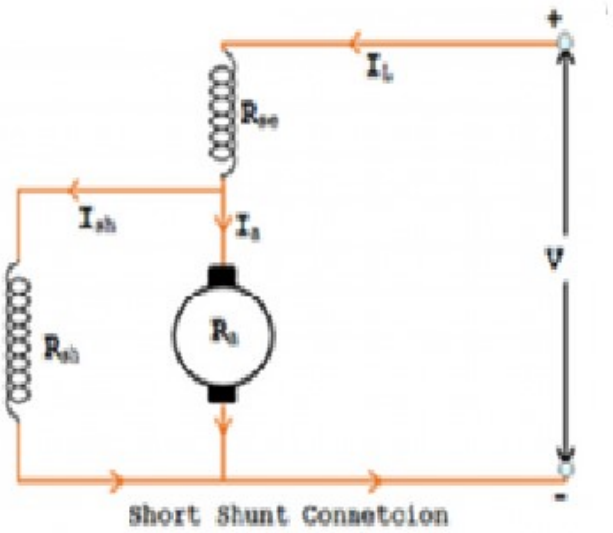

OR Equivalent Figure

Q.6	Attempt any TWO of the following : 12 Marks
a)	**Explain the working principle of stepper motor and explain any one type with neat sketch.**
Ans:	**Types of Stepper Motor :-** 1) Variable Reluctance Motor 2) Permanent Magnet Motor **(Any One Type of Stepper Motor Expected: Figure : 3 Mark & Explanation : 3 Mark)** **1) Variable Reluctance Motors:-** 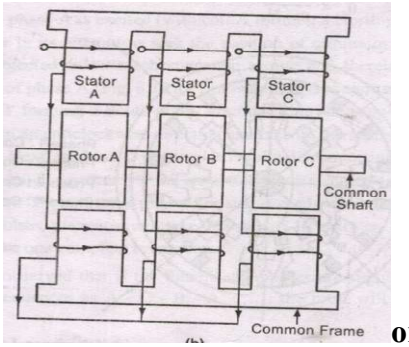 **or equivalent dia.** **Working:-** When phase A is excited rotor attempts minimum reluctance between stator and rotor and is subjected to an electromagnetic torque and there by rotor rotates until its axis coincides with the axis of phase A. Then phase 'B' is excited disconnecting supply of phase 'A' then rotor will move 30 anticlockwise directions. The Same process is repeated for phase 'C' In this way chain of signals can be passed to get one revolution and direction can be also changed. **OR** **2) Permanent Magnet Motor:-** 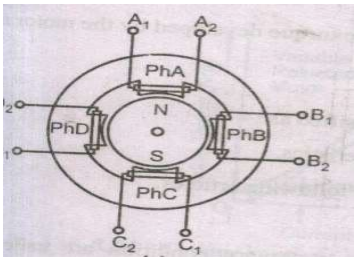 **or equivalent dia.** **Working :-** If the phase is excited in ABCD, due to electromagnetic torque is developed by interaction between the magnetic field set up by exciting winding and permanent magnet. Rotor will be driven in clockwise direction.

b)	**Explain the need of earthing in electrical systems. State the types of earthing and any two advantages of earthing.**
Ans:	**Necessity of Earthing: (Any Two point are expected)** **(2 Mark)** 1. To provide an alternative path for the leakage current to flow towards earth. 2. To save human life from danger of electrical shock due to leakage current. 3. To protect high rise buildings structure against lightening stroke. 4. To provide safe path to dissipate lightning and short circuit currents. 5. To provide stable platform for operation of sensitive electronic equipment's. **Types of Earthing:** **(Any Two types Expected : 1 Mark each)** 1. Pipe type earthing 2. Plate earthing 3. Rod earthing or Driven Rod earthing 4. Strip earthing or Wire earthing **Advantages of Earthing : (Any Two advantages from the following or equivalent are expected)** **(2 Marks)** 1. It provides an alternative path for the leakage current to flow towards earth. 2. It saves human life from danger of electrical shock due to leakage current. 3. It protects high rise buildings structure against lightening stroke. 4. It provide safe path to dissipate lightning and short circuit currents. 5. It provide stable platform for operation of sensitive electronic equipment's.
c)	**Explain with neat diagram, operation of ELCB and two applications.**
Ans:	**Diagram of ELCB (Earth Leakage Circuit Breaker) :** **(2 Marks)** 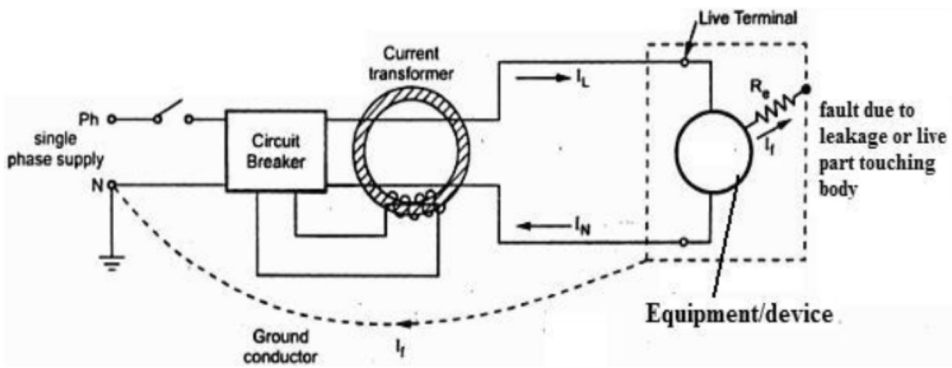 **OR Equivalent Figure**

	Operation of ELCB (Earth Leakage Circuit Breaker) : **(2 Marks)** ➢ It works on principle of relaying when the current in the earth path exceeds a set value. ➢ Under normal conditions (I_L–I_N) = I_f is very low or nearly zero. The CT surrounding the phase and neutral senses the differential current under earth fault and actuates the CB to operate (open). The difference current I_f through fault path resistance R_e is the leakage to earth. If this value exceeds a preset value, then the ELCB opens. **OR** The ELCB detects fault currents from live to the Earth (ground) wire within the installation it protects. If sufficient voltage appears across the ELCB's sense coil, it will switch off the power, and remain off until manually reset. A voltage-sensing ELCB does not sense fault currents from live to any other earthed body. **Applications of ELCB (Earth Leakage Circuit Breaker) :** **(2 Marks)** ➢ In low voltage domestic, commercial and industrial applications to protect from electric shock due to leakage current.

---------- END----------