TOPIC : TV TRANSMITTER AND RECEIVER

Block diagram of monochrome TV transmitter

[ANSWERS CAN BE EXTENDED BY EXPLAINING FLOW OF SIGNALS]

[Q] Draw the block diagram of monochrome TV transmitter. Describe the function of each block.

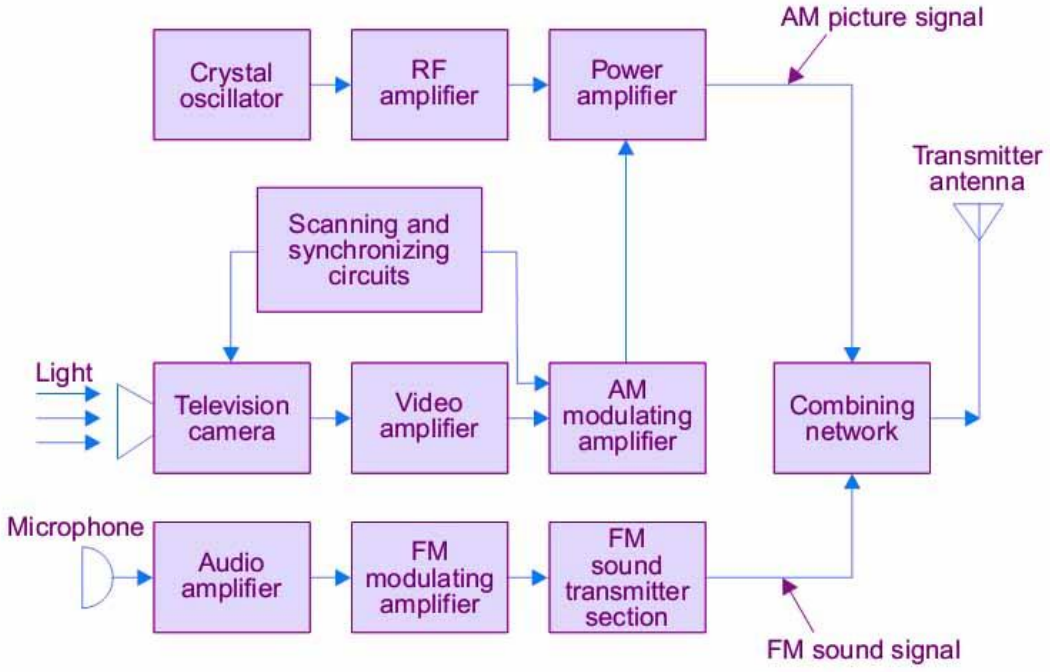

Fig. 4. Elementary block diagram of a monochrome television transmitter.

OR

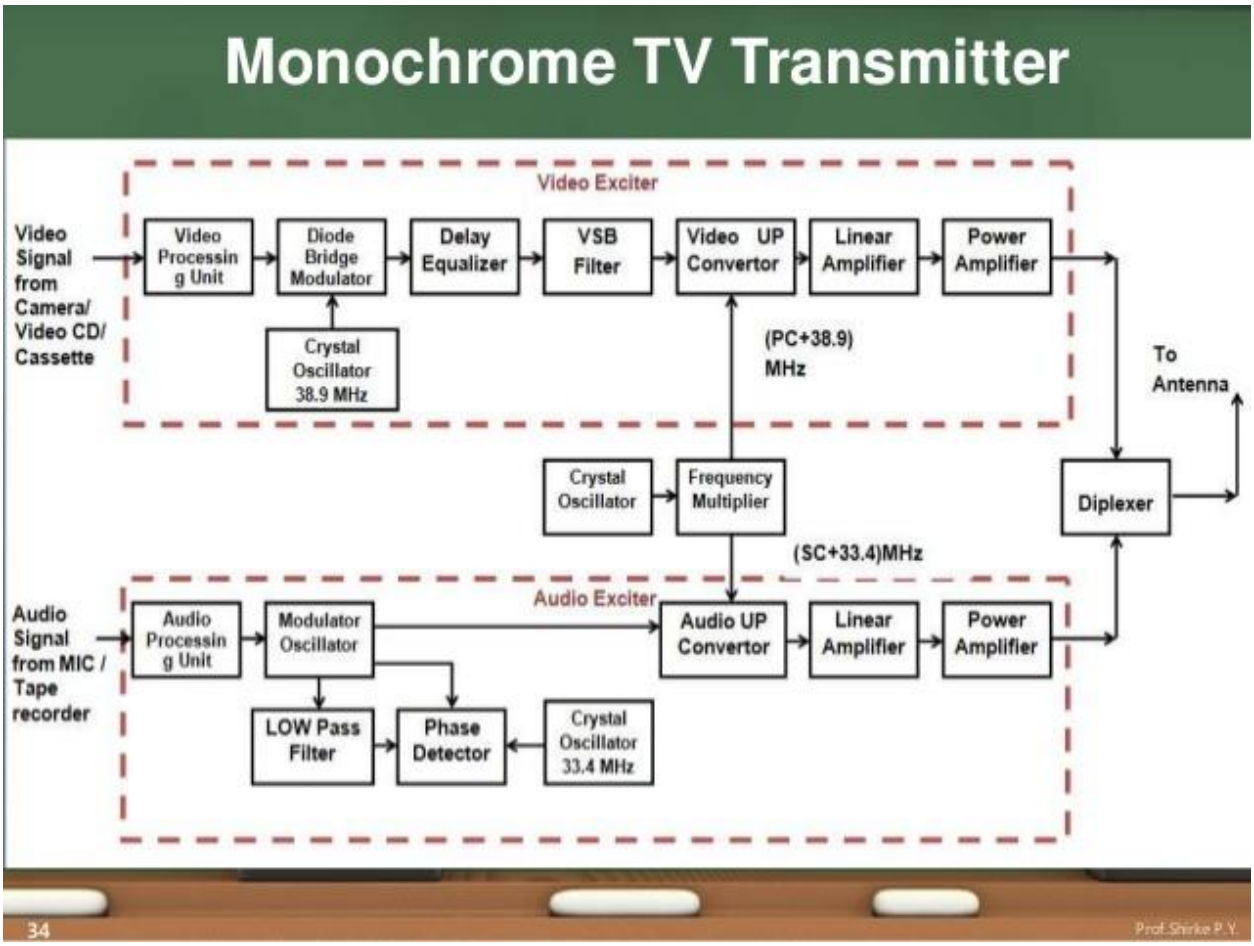

An oversimplified block diagram of a monochrome television transmitter is shown in Fig. The luminance signal from the camera is amplified and synchronizing pulses added before feeding it to the modulating amplifier.

Synchronizing pulses are transmitted to keep the camera and the picture tube beams in step. The allotted picture carrier frequency is generated by a crystal controlled oscillator.

The continuous wave (CW) sine wave output is given large amplification before feeding to the power amplifier where its amplitude is made to vary (AM) in accordance with the modulating signal received from the modulating amplifier. The modulated output is combined (see Fig.) with the frequency modulated (FM) sound signal in the combining network and then fed to the transmitting antenna for radiation

Block diagram of colour TV transmitter

[Q] Draw the block diagram of colour TV transmitter. Describe the function of each block.

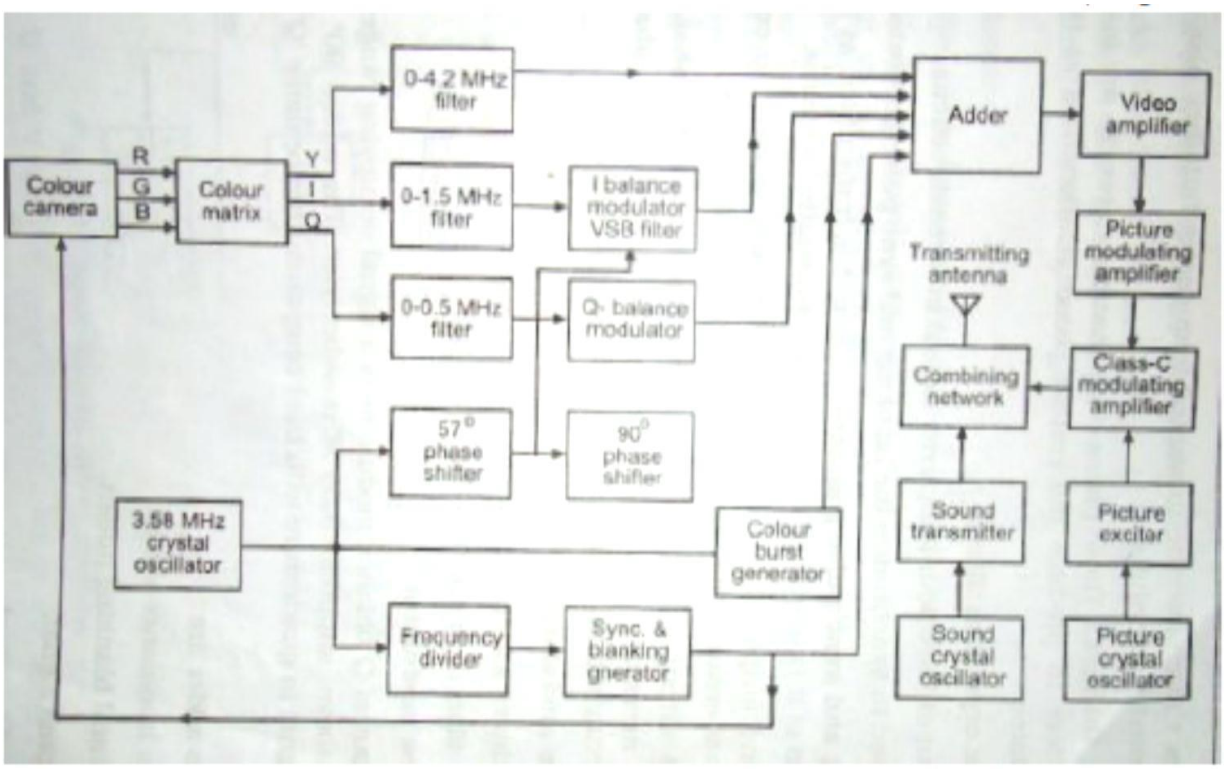

OR

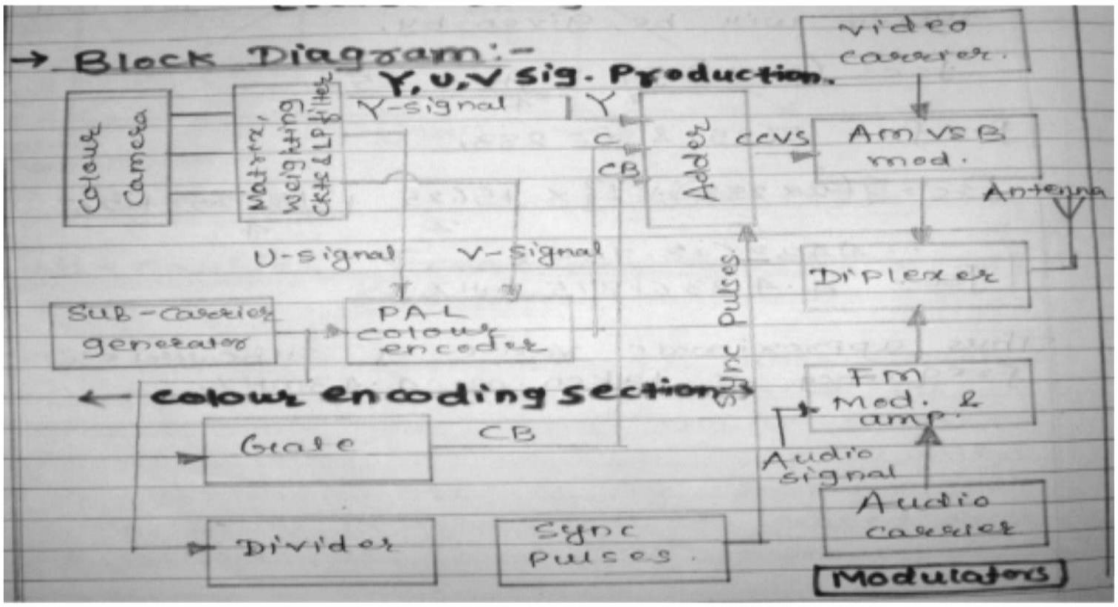

OR

Explanation:-

A PAL colour TV transmitter consists of following three main sections.

1. Production of Luminance (Y) and Chrominance (U and V) signals
2. PAL encoder
3. Video and Audio modulators and transmitting antenna

Production of Luminance (Y) and Chrominance (U and V) signals:

□□Colour camera tube produces R, G and B voltages pertaining to the intensity of red, green and blue colours respectively in pixels. The luminance signal Y is obtained by a resistive matrix, using grassman's law.

Y=0.3R+0.59G+0.11B.

□□For colour section Y is inverted colours R&B obtained from the colour camera tubes are added to it to get (R-Y) and (B-Y) colour difference signal. These signals are weighted by two resistive matrix network which gives U & V signals as **U=0.493 (B-Y) & V=0.877(R-Y)**

PAL encoder:

□□PAL switch which operates electronically at 7812.5Hz with the help of bistable multivibrator and feeds the subcarrier to balanced modulator with phase difference of +900 on one line and -900 on the next line.

□□The PAL encoder consists of a **sub carrier generator and two balanced modulator with filters to produce modulated subcarrier signal**. These signals are added vertically to give Chroma signal (C). Then Chroma signal is mixed with Y signal along with sync. And blanking pulses to produce Colour Composite Video Signal (CCVS).

Video and Audio modulators and transmitting antenna:

□□CCVS amplitude modulates the main video carrier. It is followed by a sharp VSB filter to attenuate the LSB to give AMVSB signal for transmitter. Audio signal modulates separate carrier. This modulation is FM type.

□□AMVSB video signal along with audio signal passes to the transmitting antenna through Diplexer Bridge which is a wheat-stone's bridge.

Block diagram of monochrome TV receiver.

[Q] Draw the block diagram of monochrome TV receiver. How signal is processed in each block.

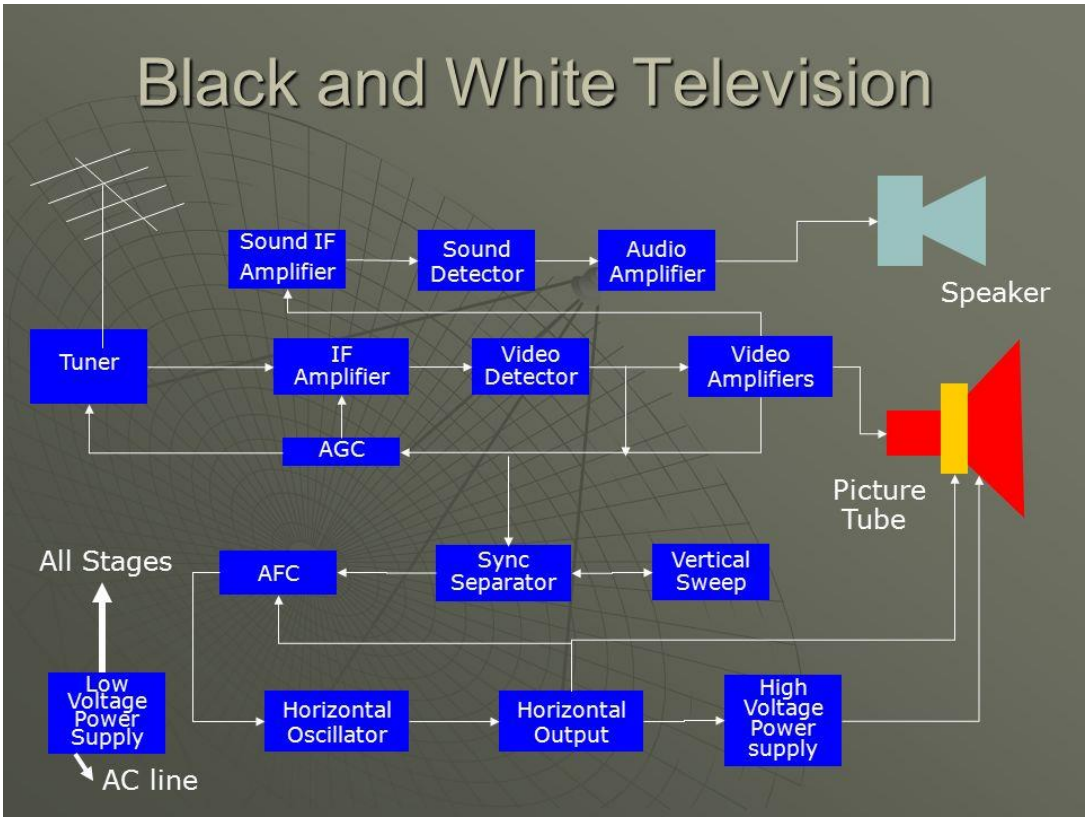

OR

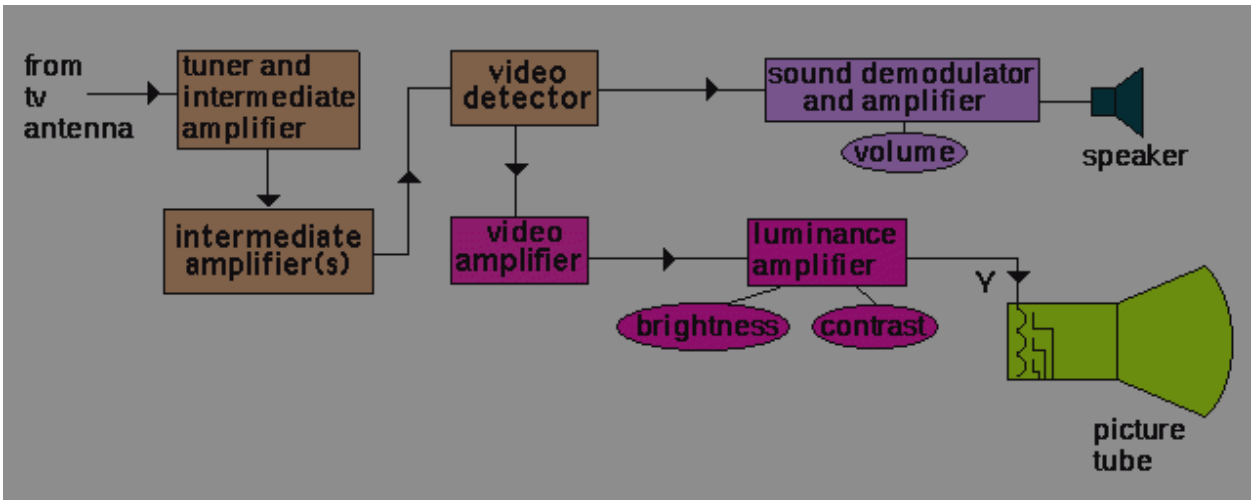

According to the **Block Diagram of Black and White Television** Sets In a typical black and white **television receiver**, the signal from the antenna is fed to the **tuner**. Two channel selector switches – one for the VHF (very-high-frequency) channels 2-13 and the other for the UHF (ultra-high-frequency) channels 14-69 - are used. They connect circuits that are tuned to the desired channels and, also discriminate against signals from undesired channels. These circuits also form part of an **amplifier**, designed to add as little snow to the signal as possible.

The **amplified signals** from the desired channel are then passed to the **mixer**, which transposes all the signal frequencies in the channel to different values, called **intermediate frequencies.** The output of the tuner consists of all the signals in the desired channel, but the intermediate channel is fixed in the frequency band from 41 to 47 MHz, no matter what channel is tuned in. This is kind of like those cable television "set top" converters, that, regardless of what channel you’re watching, always convert it to "channel 3" for your TV set.

From the tuner, the 41-47 MHz channel with all picture and sound information present is passed successively through several additional amplifiers (from two to four intermediate frequency, or IF, amplifiers), which provide most of the amplification in the receiver. Their amplification is automatically adjusted, being maximum on a weak signal and less on a strong signal. So far the receiver handles the signals in the channel just like they would be received from the transmitter, except for the shift to intermediate frequencies and the amplification.

The next stage is the **video detector**, which removes the high frequency carrier signal and recovers the video signal. The detector also reproduces (at a lower frequency) the sound carrier and its frequency variations. The sound signal is then separated from the picture signal and passes through a frequency detector, which recovers the audio signal. This signal is amplified further and fed to the **loudspeaker**, where it re-creates the accompanying sound. The picture signal from the **video** detector is used in the normal fashion for display on the **CRT** of the television receiver.

Block diagram of colour TV receiver

Draw the block diagram of colour TV receiver. How signal is processed in each block.

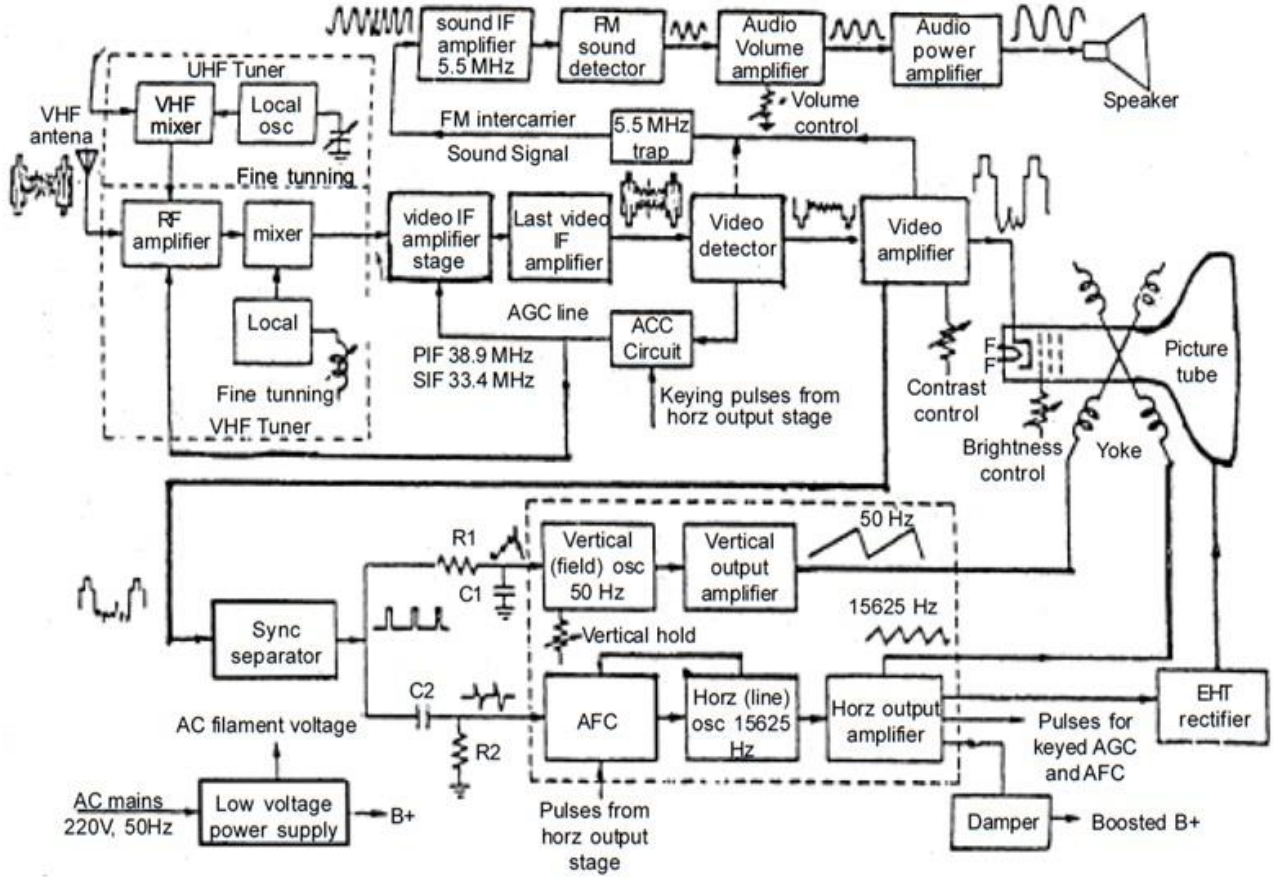

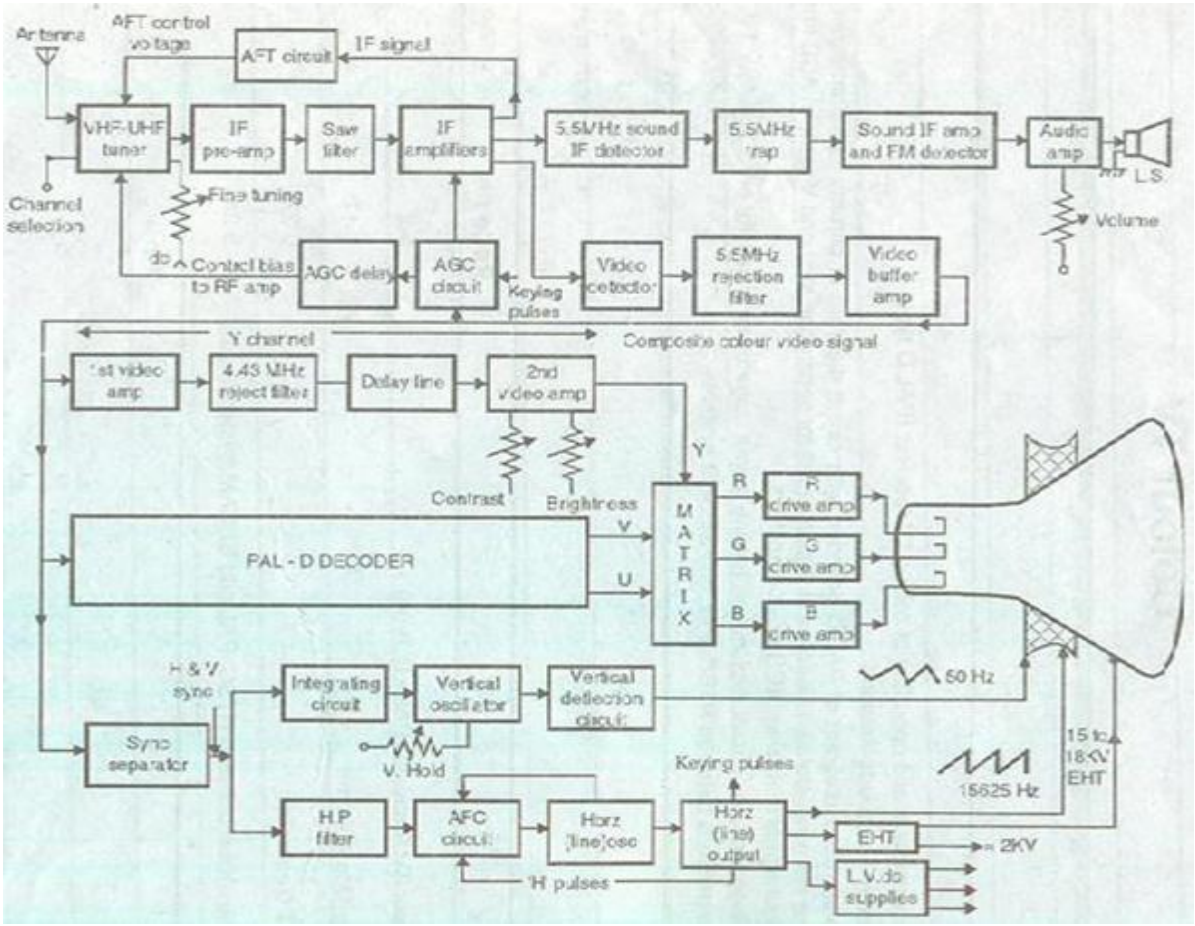

• A colour TV receiver contains all the necessary circuits of a monochrome receiver plus additional circuits required for the reproduction of a coloured picture.

 Basically a colour TV receiver is a black-and-white receiver with a decoder for the colour signals and a colour picture tube.

 The figure is the functional block diagram of a colour TV receiver.

 The block diagram shows that the circuits like the RF tuner, VIF amplifier, the video amplifier, the deflection sync, the sweep circuits and the EHT sections are virtually the same as in black-and-white receiver.

 However there are some minor differences in design and details. For example the RF response in case of colour TV is kept more uniform than in monochrome receiver, this is to avoid any attenuation of the colour sub-carrier.

 The tuning of a colour TV is critical. To avoid any mistuning of the receiver, an arrangement called AFT (Automatic Fine Tuning) is used in most cases. This arrangement is similar to the AFC and can be switched off whenever manual tuning is required.

• The colour TV uses the inter carrier sound system with one difference. The sound take-off point is at the last VIF stage immediately before the video detector. This is done to avoid interference between the sound IF and the chroma signal.

 A separate diode detector is used to produce the sound IF but the rest of the audio circuits are the same as in a monochrome receiver.

 The two main circuits which distinguish a colour TV from a monochrome TV are the colour picture tube and the chroma section containing the colour circuits.

OR

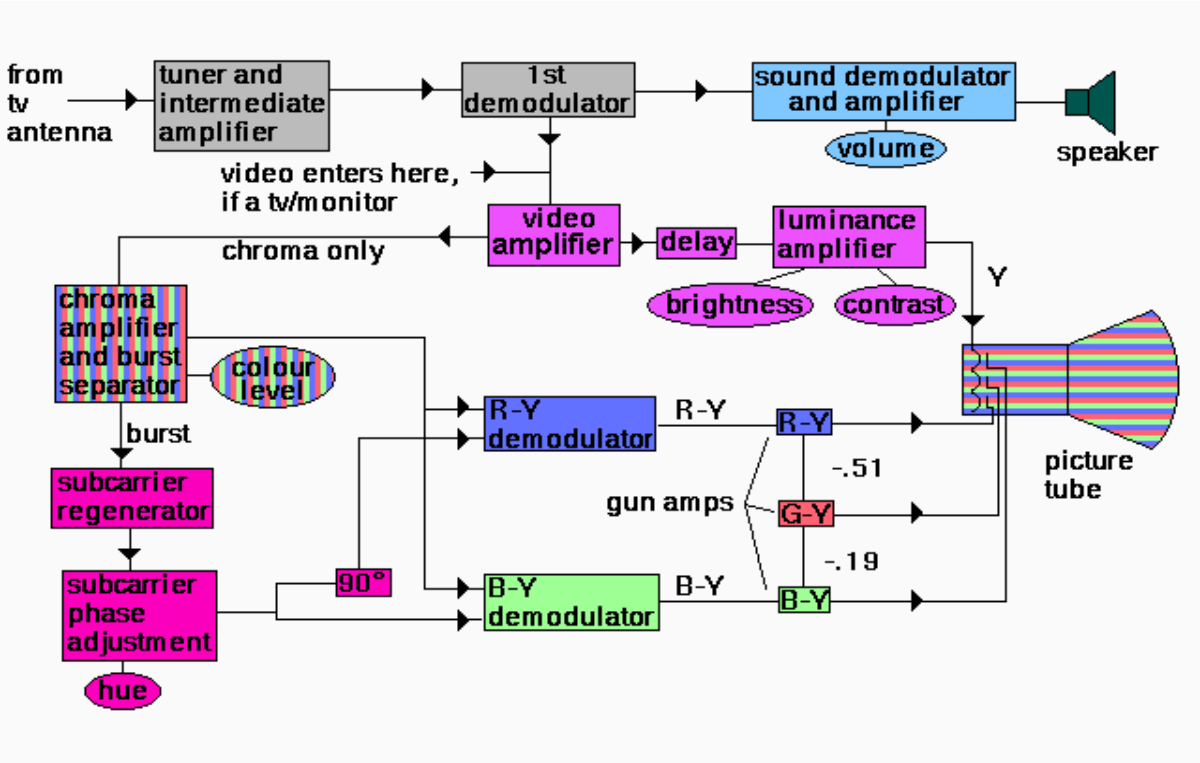

According to **Block Diagram of Colour Television Sets** In a colour television receiver, additional circuits are provided to deal with the colour.

The only difference between black and White Television set and colour Television set is the IF circuit is the importance of bandwidth for colour receivers. Remember that **video frequencies** around **3.58 MHz** just show details in monochrome, but

these frequencies are essential for colour information. Without them, there is no colour. *This is why the fine tuning control on colour television sets must be tuned exactly, or else the colour disappears*, along with the higher resolution.

The sound is usually taken off before the **video detector** in colour sets, and a separate converter is used for it, instead of taking it from the video detector. The reason that this is done is to minimize a 920 KHz beat signal that can result between the 3.58 MHz colour subcarrier and the sound carrier signal. This signal would show up as interference in the television picture.